PROGRESSIVE™ suspension
A MAG, Inc. Company
11129 G Avenue, Hesperia, CA 92345
(760) 948-4012, Fax (760) 948-4307

Airtail Suspension System for Harley Davidson Softails

Installation Instructions

Note: Please read the following instructions completely before starting installation! If you are also installing the Airtail Compressor Kit at this time, you need to read the installation instructions for that as well, before you begin to install either item. This will save several steps.

Caution

Follow instructions in an authorized shop manual or take the motorcycle to a competent dealer.

The motorcycle must be securely blocked to prevent it from tipping over when the shocks are removed. Failure to do so can cause serious damage and/or injury.

The use of lowering kits on Progressive Suspension shocks is not recommended. Use of a lowering kit may void the warranty or damage the shock/motorcycle.

Progressive Suspension shocks are designed to work on the OEM (Original Equipment) frame and swingarm. Use of these shocks on a frame or swingarm other than OEM may produce an unsatisfactory ride and void the warranty.

Transmission bolts must be installed in the OEM position to insure proper clearances for the shocks. Consult your factory shop manual for proper installation.

Make sure that proper bushings/sleeves are installed in the shocks. Improper bushings/sleeves can cause unsatisfactory and/or unsafe operation.

Lowering your motorcycle will decrease initial ground clearance. The motorcycle will be lower to the ground and care should be taken to avoid bottoming, especially over bumps or in turns. Lowering a motorcycle can change the handling characteristics. Always use extreme caution when riding after a change is made and take time to get accustomed to any handling change.

Note: Along with the normal tools required to remove and install shocks on a Softail, the Airtail Suspension System requires a source of high-pressure air to install and adjust it. This can consist of either compressed air, such as that produced by an air-compressor (not exceeding 150 psi), or pressure generated by a high-pressure low-volume manual pump (such as Progressive Suspension's part number GP2-0-200).

Installation

Progressive Suspension's Airtail suspension system is designed as a direct bolt on replacement for your stock Softail shocks. Along with the ability to conveniently adjust both the bottoming control and the ride height, they have vastly improved damping.

1. Place motorcycle securely on a stand or blocks so the rear wheel is slightly off the ground.
2. Per instructions in an authorized shop manual, remove your old shocks. Note location of the mounting hardware.
3. Your Airtail suspension system is comprised of two completely different shocks—one with a dual chamber "air" spring, and the other with a coil type spring. Start by installing the one with the coil spring on the left side. Simply mount it as you would a stock shock using the stock mounting bolts and washers. You may note that the preload on this shock is set by the factory to the "maximum" position—and it is designed to be left there. Your preload or "bottoming control" will be adjusted strictly via the air spring once the system is installed.
4. Tighten the coil-spring shock mounting bolts to the proper torque specifications (see shop manual for specs).
5. Remove the coil cover and coil noting the configuration of the hardware. Then route the airlines (2) from just above the coil area, under the seat, and down behind the battery and oil tank to the right shock area making sure they won't be pinched, exposed to excessive heat, or contact any moving parts. For now, leave approximately equal extra lengths at the top and bottom. The goal is to plug the airlines into the shock then pull the excess line up towards the manifold area once the shock is mounted.

Note: Both the manifold and air shock have high pressure quick connect fittings. To connect the airlines, simply press them into the fitting until they bottom out. If you need to trim the airline it is vital that you make a square cut with a sharp razor (do not use "dykes" or wire cutters) as failure to do so could result in a leak. If you need to disconnect a line for any reason, you simply push in the outer collar on the fitting and pull the airline out. Also, if you disconnect an airline it's a good idea to trim a small amount (approximately 1/8 of an inch) off the end you pulled out—as a freshly cut and installed line is less likely to leak.

6. To mount the air shock, the "bottoming control" chamber must first be pressurized enough to overcome the internal gas force of the damper. This will cause the shock to shorten to the same length as the spring shock. To achieve this, start by plugging both airlines (in the shock area) into the shock. Then note which line leads from the "bottoming control" chamber (which is the fitting on the shaft end of the air chamber) to the coil area and temporarily plug that line into the adjustment manifold. Now pressurize it until the shock is fully compressed.
7. Once the air shock is the same length as the spring shock, you simply mount it in the same manner as you did the

Copyright © 2003 by Progressive Suspension, Inc. All Rights Reserved.

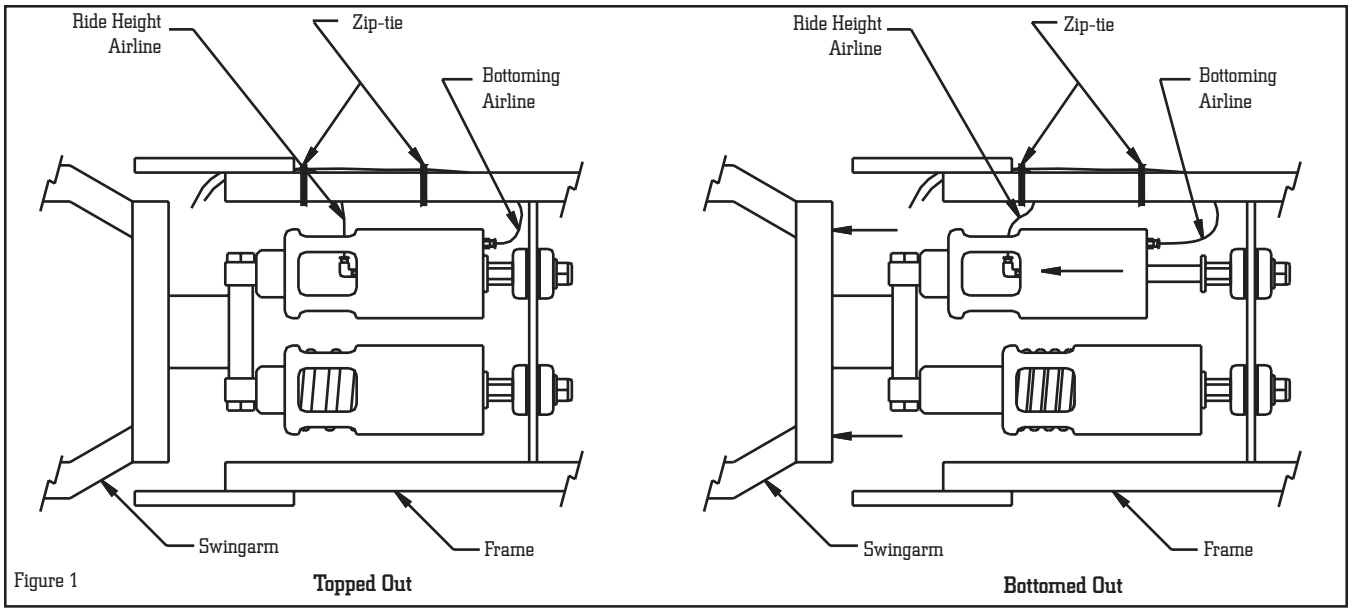

Figure 1 **Topped Out** **Bottomed Out**

spring shock—tightening the shock mounting bolts to the proper torque specifications (see shop manual for specs). As you do this, carefully pull and feed the extra slack in the airlines up and towards the coil area. **Note**: On 2000 and newer models the entire air cylinder moves with the swingarm. Therefore, it is necessary to leave enough line to allow for an inch and a half (1.50") of air cylinder movement with no obstructions (see figure 1).

8. Now that you've mounted the shocks and pulled the extra airline up to the coil area, it's time to trim the line to the proper length. You first need to bleed off all the pressure in the "bottoming control" chamber, then disconnect the airline and trim both airlines to the proper length—just enough that you can readily plug them into the adjustment manifold, yet still maneuver it into position for installation. The slack needed to do this can be taken up and hidden under the seat after the manifold is mounted, so be careful not to cut them too short. Once you've cut the line, plug them into the manifold noting which line goes to which chamber—we recommend the "bottoming control" on top and "ride height" control on the bottom (up for up, and down for down). Now proceed to mount the adjustment manifold.

9. The manifolds mount differently on the 2000 and later models than they do on the 1999 and earlier models. The differences are as follows:

- 2000 and up—the manifold comes with 10-24 bolts (longer and slightly smaller than stock) which go through the coil, then the threaded frame mount, then thread into the manifold itself (see figure 2).

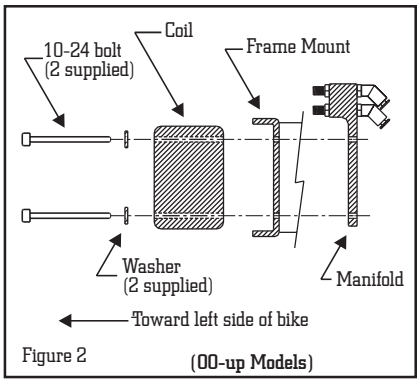

Figure 2 **(00-up Models)**

- 1999 and earlier—the manifold comes with ¼-20 bolts (longer than stock), which go through the manifold, followed by the frame mount, the coil, and finally the threaded mounting plate (see figure 3).

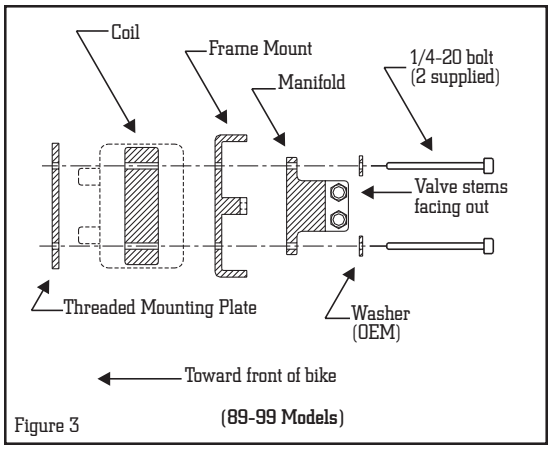

Figure 3 **(89-99 Models)**

Tighten all hardware to the proper torque specifications (see shop manual for specs) and re-install the coil cover. Take up any slack in the airlines and tie them off to appropriate points on the frame.

You have completed the installation of your Airtail suspension system. It is extremely important that you now read and follow the setup instructions—***before*** you attempt to ride the motorcycle. Failure to do so could result in ***damage***, ***injury*** or ***death***! Due to virtually unlimited adjustability the Airtail suspension system is capable of producing the very best—or worst—of ride qualities. Understanding and following the proper setup procedure is the difference between these two extremes.

For a balanced suspension, we highly recommend installing a pair of Progressive Suspension fork springs or fork lowering kit. Also, you can make your Airtail suspension system even easier to adjust by adding Progressive Suspension's "Airtail Compressor Kit" electric compressor system (89-99 part number 30-5100, 00-02 part number 30-5101).

Copyright © 2003 by Progressive Suspension, Inc. All Rights Reserved.